# CS2100 Computer Organization

## AY2023/24 Semester 2

## Assignment 2

## (Deadline: 18 March 2024, Monday, 1pm)

**Instructions**

1. There are TEN questions in this assignment, totaling FORTY marks.

2. This assignment is due on **Monday, 18 March 2024, 1 pm.** The submission folder will be closed at 1:10 pm, **after which no submission will be accepted and you will receive ZERO for this assignment.**

3. Answer these questions on Canvas → Assignments.

4. You should do these assignments on your own. Do not discuss the assignment questions with others.

5. Please post on QnA "Assignments" topic if you have any queries.

**Part I: MIPS Datapath** (20 marks)

**Question 1.** (20 marks)
Consider the MIPS Datapath with the initial values of the registers and memory as shown below. Values preceded by 0x are in hexadecimal.

```
MIPS Registers
R0  (r0) = 0x00000000 | R1  (at) = 0x00002000
R2  (v0) = 0x00000001 | R3  (v1) = 0x0000000a
R4  (a0) = 0x00000005 | R5  (a1) = 0x7ffff000
R6  (a2) = 0x7ffff004 | R7  (a3) = 0x000000b0
R8  (t0) = 0x00000001 | R9  (t1) = 0x00000c00
R10 (t2) = 0x0000c000 | R11 (t3) = 0xfffffff0
R12 (t4) = 0xf0000000 | R13 (t5) = 0x00000fff
R14 (t6) = 0x00006200 | R15 (t7) = 0x00000e00
R16 (s0) = 0x00300000 | R17 (s1) = 0x00000c00
R18 (s2) = 0x00040200 | R19 (s3) = 0x00011000
R20 (s4) = 0x00030200 | R21 (s5) = 0x00000000
R22 (s6) = 0x00055000 | R23 (s7) = 0xf0000000
R24 (t8) = 0x00000005 | R25 (t9) = 0x0000d000
R26 (k0) = 0x00000000 | R27 (k1) = 0x00000000
R28 (gp) = 0x10008000 | R29 (sp) = 0x7fffeff4
R30 (s8) = 0x1000000f | R31 (ra) = 0x00400018
```

| **Address** | **Memory** |
|---|---|
| 0xFFFFFF94 | 1 |
| 0xFFFFFF98 | 2 |
| 0xFFFFFF9C | 3 |
| 0xFFFFFFA0 | 4 |
| 0xFFFFFFA4 | 5 |
| | |

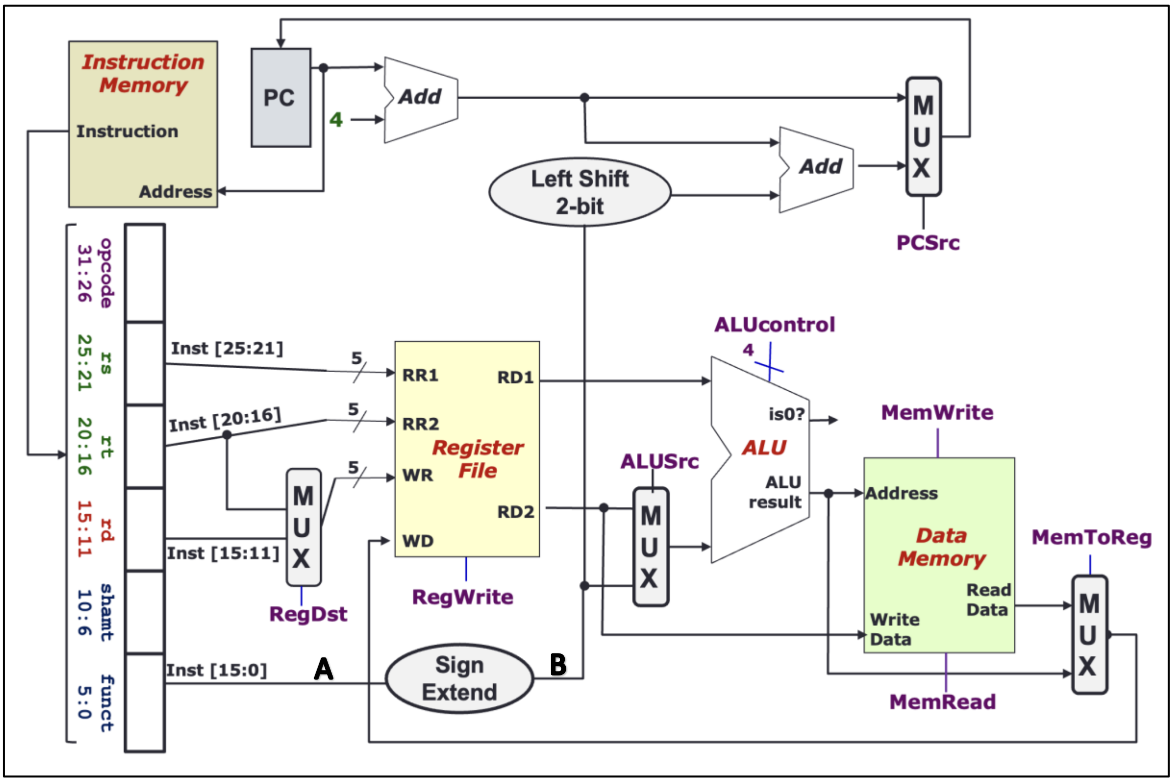
Instruction Memory
Instruction
Address
PC
4
Add
Add
Left Shift 2-bit
MUX
PCSrc
opcode 31:26
rs 25:21
rt 20:16
rd 15:11
shamt 10:6
funct 5:0
Inst [25:21]
Inst [20:16]
Inst [15:11]
Inst [15:0]
5
5
5
RR1
RD1
RR2
Register File
WR
RD2
WD
MUX
RegDst
RegWrite
A
Sign Extend
B
ALUcontrol
4
is0?
ALU
ALU result
ALUSrc
MUX
MemWrite
Address
Data Memory
Read Data
Write Data
MemRead
MemToReg
MUX

The current PC value is **256** and the following instructions are being executed one by one:

```
lw  $s3, -100($s5)  //instruction 1
add $s6, $s3, $s4   //instruction 2
```

Fill in the values of the fields in the table below. You have to fill column 2 after executing instruction 1 and column 3 after executing instruction 2. For rows marked with *, your answers must follow the base given (0b for binary, 0x for hexadecimal), and you must write all the required digits, or it will be graded as wrong even if the value is correct. You do NOT need to include the prefix 0b or 0x in your answers. For rows without *, the answers are to be in decimal, and you are not to include leading zeroes in your decimal answers.

| **Fields** | **Values for Instruction 1** | **Values for Instruction 2** |
|---|---|---|
| RegDst | | |
| MemRead | | |
| MemWrite | | |
| ALUcontrol* | 0b | 0b |
| RegWrite | | |
| Instruction[31-26]* | 0b | 0b |
| Instruction[25-21]* | 0b | 0b |
| Instruction[20-16]* | 0b | 0b |
| Instruction[15-0]* | 0b | 0b |
| A* | 0b | 0b |
| B* | 0x | 0x |
| RD1* | 0x | 0x |
| RD2* | 0x | 0x |
| ALU Result* | 0x | 0x |
| ALUSrc | | |
| RR1 | | |
| RR2 | | |
| WR | | |
| WD | | |
| MemToReg | | |

**Part II. Boolean algebra, logic circuits and simplification** (20 marks)

Note that in general, unless otherwise stated, complemented literals are not available.
Remember to write · for the AND operation, or mark will be deducted. If you are typing your answers, you may use the full stop (.) for AND and the single quote (‘) for complement.

**Question 2** (4 marks)

The exclusive-or (XOR) binary operation is defined as follows:

$$x \text{ XOR } y = x' \cdot y + x \cdot y'$$

The exclusive-nor (XNOR) binary operation is the negation of XOR. Express the exclusive-nor (XNOR) binary operation, *x* XNOR *y*, in **sum-of-products expression**, by completing the derivation below using Boolean algebra and justifying the steps with appropriate laws and theorems of Boolean algebra.

$$x \text{ XNOR } y = (x \text{ XOR } y)' = \ldots$$

For ease of typing, you may use the full stop (.) for AND and the single quote (‘) for complement.

**Question 3** (1 mark)

You want to build a logic circuit that performs the NOR operation (i.e. *x* NOR *y*) by using only 2-input NAND gates. What is the minimum number of NAND gates required?

**Question 4** (2 marks)

You want to build a logic circuit that performs the NOR operation (i.e. *x* NOR *y*) by using only 2-input NAND gates and the fewest number of gates. Draw the circuit, labelling the inputs (*x*, *y*) and output (*x* NOR *y*) clearly. Complemented literals are not available.

**Question 5** (1 mark)

Given the 4-variable Boolean function $F(A,B,C,D) = \prod M(2,3,4,9,11,13) \cdot \prod X(6,7,8,12,15)$ where $M$ are the maxterms and $X$ the don’t-cares, how many prime implicants are there on the K-map of $F$? You do not need to show your K-map.

**Question 6** (1 mark)

Given the 4-variable Boolean function $F(A,B,C,D) = \prod M(2,3,4,9,11,13) \cdot \prod X(6,7,8,12,15)$ where $M$ are the maxterms and $X$ the don’t-cares, how many essential prime implicants are there on the K-map of $F$? You do not need to show your K-map.

**Question 7** (2 marks)

Given the 4-variable Boolean function $F(A,B,C,D) = \prod M(2,3,4,9,11,13) \cdot \prod X(6,7,8,12,15)$ where $M$ are the maxterms and $X$ the don’t-cares, write out the simplified Product-of-Sums (POS) expression for $F$. If there are more than one answer, write out all answers.

**Question 8** (3 marks)

Given a Boolean function on 8 variables, *Z*(*A,B,C,D,E,F,G,H*), write the simplified Sum-of-Products (SOP) expression for each of the following.

(i) $m123 \cdot m4$　　(ii) $m123 + M4$　　(iii) $m123 \cdot M4$

**Question 9** (3 marks)

For each of the following, write the minterm numbers in increasing order, separated by comma, without any space.

(i) Given the following functions:

$F(A,B,C) = A + B'\cdot C'$

$G(A,B,C) = B + A'\cdot C$

$H(A,B,C) = F(A,B,C) \cdot G(A,B,C)$

What is $H(A,B,C)$ in $\Sigma m$ notation? That is, $H(A,B,C) = \Sigma m(\ldots)$. Write out the list of minterm numbers in increasing order, separated by comma, without any space.

(Ii) Given the following functions:

$P(A,B,C) = A + B'$

$Q(A,B,C) = (A' + B) \cdot (A + C)$

$R(A,B,C) = P(A,B,C) \oplus Q(A,B,C)$ where $\oplus$ is the XOR operator

What is $R(A,B,C)$ in $\Sigma m$ notation? That is, $R(A,B,C) = \Sigma m(\ldots)$. Write out the list of minterm numbers in increasing order, separated by comma, without any space.

(iii) A circuit counts the number of '0' bits in an unsigned binary integer *ABCD* and outputs an unsigned binary integer *XYZ*. For example, if *ABCD* = 1010, then *XYZ* = 010 as *ABCD* contains two 0s; if *ABCD* = 0100, then *XYZ* = 11 as *ABCD* contains three 0s.

What is $Z(A,B,C,D)$ in $\Sigma m$ notation? That is, $Z(A,B,C,D) = \Sigma m(\ldots)$. Write out the list of minterm numbers in increasing order, separated by comma, without any space.

**Question 10** (3 marks)

The following Boolean function $F(a,b,c)$ is given in sum-of-minterms expression using the $\Sigma m$ notation:

$$F(a,b,c) = \Sigma m(2,5).$$

Implement this function using the fewest number of logic gates. You are to draw the logic diagram clearly, labelling all inputs and the output of the circuit. Complemented literals are not available.

(Logic gates you may use are inverters, AND, OR, NAND, NOR, XOR and XNOR gates. Other than the inverters, the other gates are all 2-input gates.)

**=== END OF PAPER ===**