Performance Trade-off in Distributed Simulation

Bhakti S. S. Onggo and Teo Yong Meng
Department of Computer Science
National University of Singapore

Previous work

- **Event orderings formalization using Partial Order Set**
- **Space performance analysis**

Objectives

- **Extend to time performance analysis**
- **Space and time trade-off**

Outline

- Performance Analysis in PDES
- Space Performance Analysis
- Time Performance Analysis
- Experiments
- Conclusions and future works

Performance Analysis

Performance Analysis in PDES

- Analytical
  - stochastic processes (markov chain), queueing theory, operational law, etc
- Simulation based
  - Simulate the PDES protocol
- Critical Path Analysis
  - Derive the critical path

Event Ordering based analysis

- Simulation protocol implement a certain event ordering
- Variation in the implementation does not affect the event ordering
- Combination between simulation based and critical path analysis

Space Performance Analysis

Simulation Modeling Process

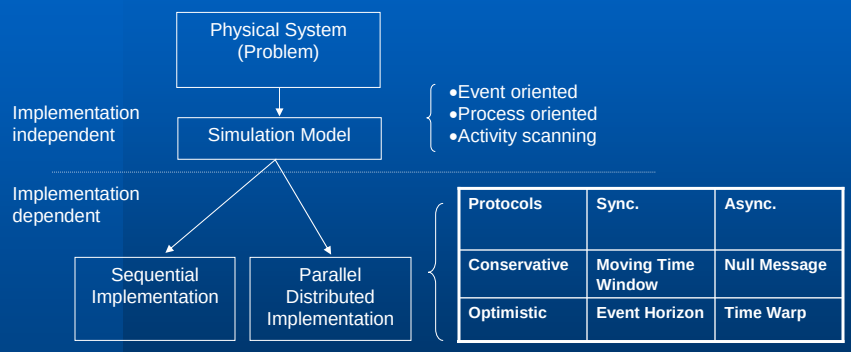

Protocols	Sync.	Async.
Conservative	Moving Time Window	Null Message
Optimistic	Event Horizon	Time Warp

Space Analysis

- **Memory requirement**
- **Classification:**
  - **M_{prob}: characteristic of the real world system**
  - **M_{ord}: characteristics of the event ordering**
  - **M_{sync}: implementation overhead**

FOR MORE INFO...

Effect of Event Ordering on Memory Requirement in Parallel Simulation (MASCOTS01) & Conservative Simulation Using Distributed Shared Memory (PADS02)

Time Performance Analysis

Time Analysis

- Event parallelism
- Classification:
  - Π_{prob}: parallelism in real world system
  - Π_{ord}: parallelism due to event ordering
  - Π_{sync}: parallelism after implementation

Inherent Event Parallelism

- Definition: the existing parallelism in the physical system
- Factors:
  - size
  - traffic intensity

Event Ordering Parallelism

- Definition: parallelism that can be exploited by applying a certain event ordering
- Factors:
  - Characteristics of the physical system
  - Strictness of event ordering

Effective Event Parallelism

- Definition: parallelism obtained after running the simulation program on the real machines
- Factors:
  - Characteristics of the physical system
  - Strictness of event ordering
  - Implementation algorithm
  - execution platform (processor, network, operating system, etc)

Event Parallelism Example

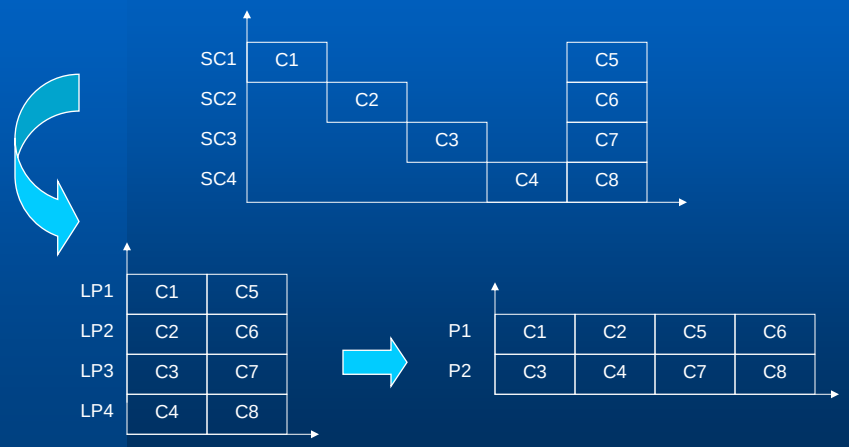

Experiments

Experiment

- Focus on event orderings
- Apply four existing event orderings
  - Total event ordering
  - Timestamp event ordering
  - Time-interval event ordering
  - Partial event ordering
- TSA library
  - order the set of events according to a certain event ordering, measure parallelism & memory

TSA Library

```
While (simulation is in progress) {
  remove event e with the smallest time
  stamped from event list
  simulation_clock = ts(e)
  execute event_handler(e)
  TSA(e)
}
TSA_report()
```

Synthetic Benchmarks

- **Four queuing network topologies**

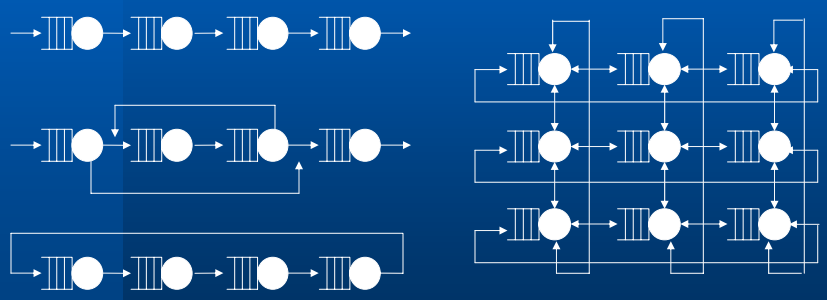

Design Experiment

- **Factors**
  - **Characteristics of real world system**
    - **Size (the number of service centers)**
    - **Traffic intensity (open system), jobs population (closed system)**
    - **Topology: four benchmarks**
  - **Four event orderings**
- **Output**
  - **Event ordering parallelism**
  - **Memory requirement**

Effect of Event Ordering (cont)

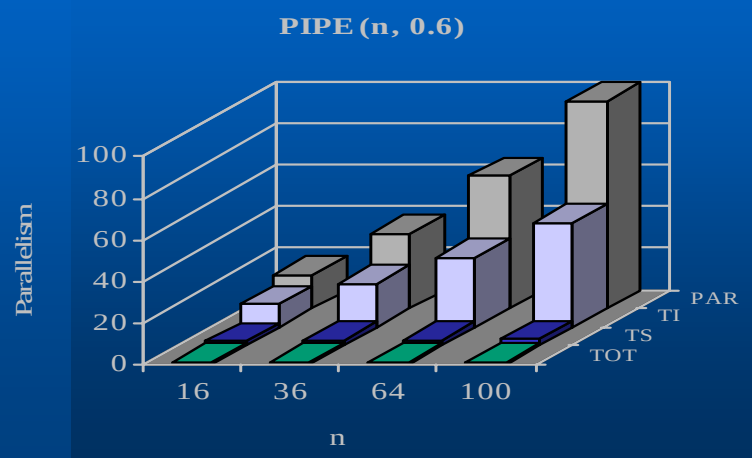

Effect of Event Ordering (cont)

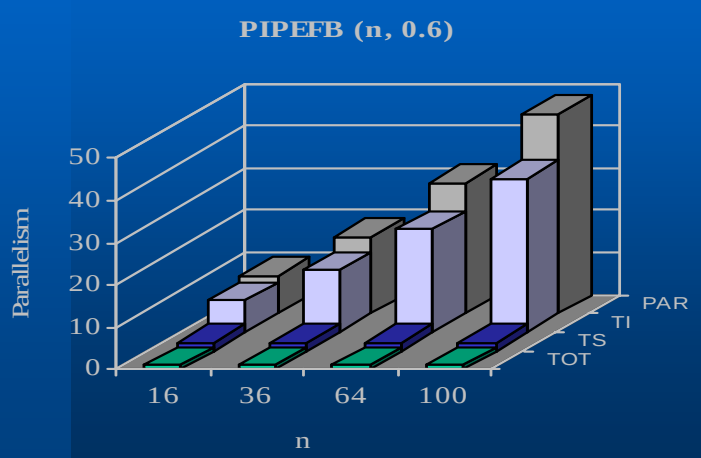

Effect of Event Ordering (cont)

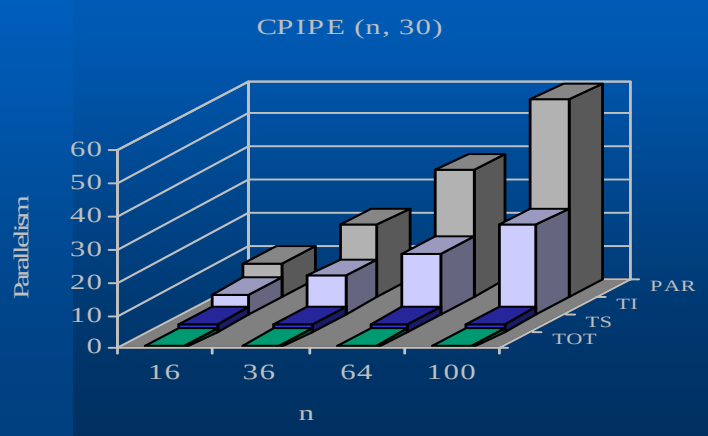

Effect of Event Ordering (cont)

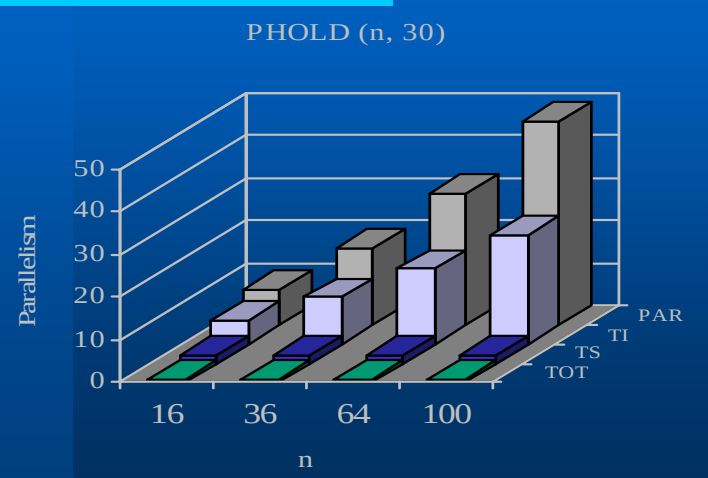

Effect of Topology

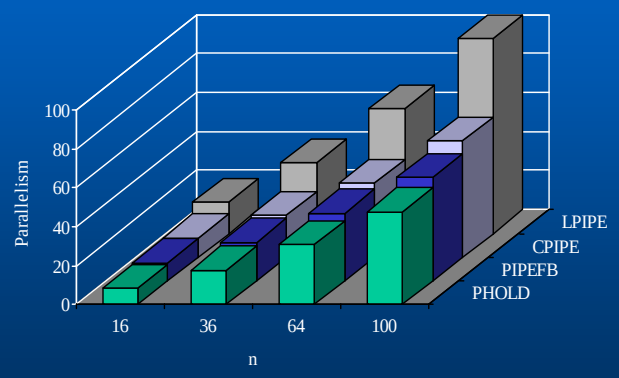

For the same average number of jobs in the system

Time & space trade off

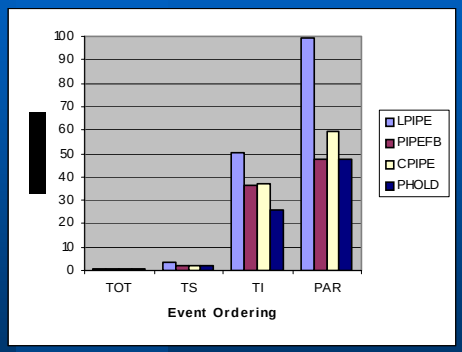

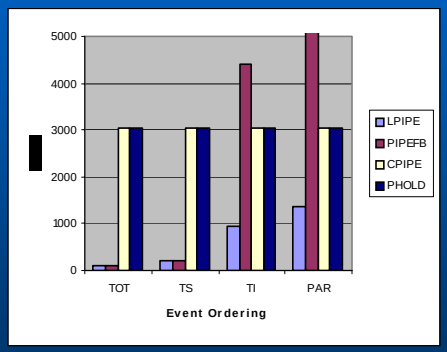

For the same size and average number of jobs in the system

Conclusion & Future Works

Conclusion

- Event ordering based performance analysis for PDES
- Definition & classification of memory requirement in simulation
- Definition & classification of event parallelism in simulation
- The effect of size, traffic intensity, topology and event ordering on time and space performance

Future Works

- Find out the event ordering of the existing simulation protocols
- Experiment on M_{sync} and Π_{sync} on selected protocols (too many)
- Theory:
  - event ordering strictness
  - analytical model for each memory component and event parallelism level

Thank you